Tubular motor with built-in radio receiver and return channel, obstacle detection function and electronic limit switches.

Installation and operation manual

YYGL35REIC-10/17
YYGL45REIC-20/15

REIC tubular motor is an InelControl system device for automatic operation of external roller blinds, internal roller blinds, ZIP screen blinds and shutter blinds.
The tubular motor features an obstacle detection function and automatic limit switches.

The device includes a radio receiver with return channel. The roller blind status signal sent via a return channel provides full control over the device operation.

The roller blind curtain length must correspond to the length of the guides to ensure correct operation of the tubular motor.

1 Safety guidelines

General guidelines

The tubular motor with obstacle detection function is configured by default to guarantee safe installation and operation, provided that all guidelines and relevant safety and accident prevention regulations are followed. Installation and repairs must be carried out by a trained and qualified professional. Do not modify or change the tubular motor in any way. All warranty repairs must be carried out by the manufacturer. Use genuine spare parts and accessories only. The operational safety of the tubular motor can only be guaranteed if the device is used as intended. The limit values provided in the specifications must not be exceeded under any circumstances.

Additional safety regulations

Follow the relevant safety and accident prevention regulations when installing, commissioning and maintaining the tubular motor. In particular, observe the following:
1. Fire safety regulations.
2. Accident prevention regulations.

General information on hazards and safety measures

The following are the general guidelines for use of INEL devices with other external devices. Follow the guidelines when installing and operating these devices.

Caution - Failure to take precautions may result in damage to the tubular motor, roller blind, roller blind box, facade etc.:

• Check if all screw connections are secure before installing the tubular motor with radio receiver and setting the limit positions.

Danger - Failure to take precautions may result in injury or death.

• Check if the local voltage supply parameters correspond to the device specification.
• Follow the relevant safety and accident prevention regulations.
• Use a circuit breaker for safe power supply disconnection (e.g. fuse cut-off switch) for all connections.
• Check the power wires and cables regularly for damaged insulation and continuity.
• Switch off the power supply before replacing damaged cables.

Warning

Do not let children play with the control devices.
• Keep the control devices out of reach of children.
• Observe the roller blind in motion at all times and keep other people away until it is fully opened or closed;
• Provide training and instructions for the users on device operation and related risks. The operator is deemed to have been trained if the employer, administrator or owner of the device have instructed and authorised the operator to operate the device.

2 Installation manual

2.1 Safety

- The device must be installed by qualified personnel only.
- The weight of the roller blind may not exceed the maximum load of the drive specified in the selection table (see the end of the instructions)
- Correct cable installation (loop facing down) will protect the tubular motor against water damage.
- Do not drill holes in motor housing.
- Protect the motor against contact with liquids.
- Avoid shocks, impacts and damage to the motor.

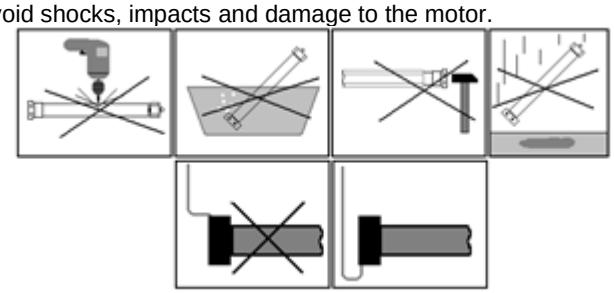

Fig. 1

2.2 Installing the motor

- Attach the bracket (**A**) to the side of the roller blind box, connect the adaptor (**D**) with the motor thrust ring.
- Connect the driver (**E**) to the motor axis and secure it with a cotter pin (**F**). Insert the motor assembly into the roller tube (**G**).

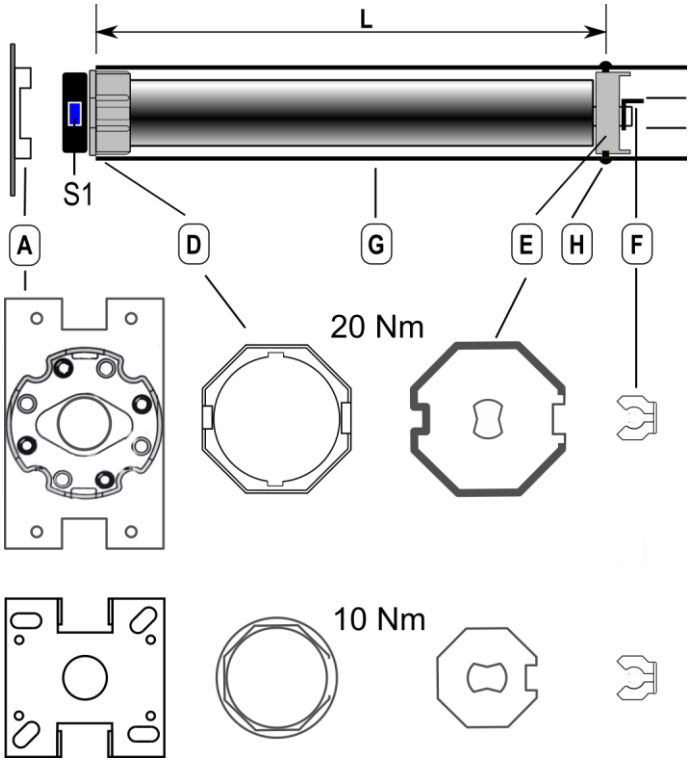

Fig. 2

NOTE: The motor is fitted with an internal thermal breaker that allows the roller blind to work continuously for approx. 4 minutes, after which the temperature inside the motor will exceed the permissible value and trip the thermal breaker. Subsequent vertical movement of the roller blind will only be possible after the motor cools down (it can take up to twenty minutes). The thermal protection used guarantees long service life of the tubular motor.

2.3 Electrical connections

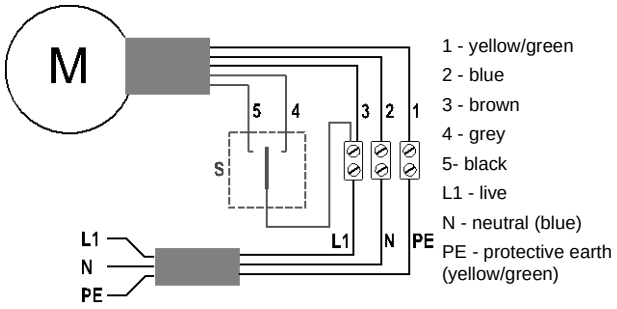

Fig. 3

A monostable three-position (shutter blind switch) **S** can be connected to input 4 and 5 of the tubular motor. Press and release UP to raise the roller blind; press and release UP or DOWN to stop the roller blind.

TURN OFF THE POWER SUPPLY BEFORE MAKING ANY CONNECTIONS!

Incorrect installation may result in motor stopping unexpectedly.

To ensure correct operation of the obstacle detection function:

1. Use a special driver included with the motor (Fig. 2-E).
2. Make sure the roller blind curtain moves freely in the guides and in the box. The movement must not be limited in any way by thermal insulation, flyscreen etc.

3 Starting and configuring the tubular motor in InelControl system

The tubular motor will be automatically detected by the system after power on.

For information about registering and configuring the tubular motor in InelControl system, see “Control unit user manual and InelControl system configuration”.

Before starting/programming the tubular motor, check the roller blind curtain, guide and roller blind box condition and make sure the window is fitted with a window sill.

The roller blind box and guides must be free from dirt and allow free movement of the roller blind curtain at its entire lenght. Dirty or tight guides may cause damage to the tubular motor and the roller blind that is not covered by the warranty.

4 Obstacle detection function

EIC type drives detect motor overdrive, i.e. reduced speed when the roller blind moves up. When the roller blind moves down, the tubular motor detects any obstacles in contact with its bottom strip. To set the limit positions:
Upper limit position:
- at the stops - the roller blind will stop after detecting reduced motor speed;
- at selected point;

Bottom limit position:
- at the rigid link - the roller blind will stop after detecting reduced motor speed;
- at selected point;
- at the window sill (or stops) - the roller blind will stop after detecting an obstacle.

The function applies to downward movement only. For upward movement, the tubular motor will stop after reduced speed is detected.

If the roller blind stops at an unexpected obstacle, the tubular motor will move in the opposite direction to reduce strain on the roller blind curtain and to allow the user to remove the obstacle.

5 Troubleshooting

Problem: Motor is not responding
Cause: Thermal protection tripped
Solution: Wait for 10 to 20 minutes

Problem: Roller blind curtain will not close
Cause: Roller blind curtain stuck in the guides
Solution: Check the guides and the roller blind curtain slats

---

Problem: Motor stops automatically
Cause: The curtain is blocked in the guides
Solution: Check the guides and the roller blind curtain slats

---

Problem: Rigid stops not detected in semi-automatic mode
Cause: Roller blind curtain too long.
Solution: Reduce the roller blind curtain length.

Problem: Obstacle not detected when moving down.
Cause: Incorrect limit position set.
Solution: Restore the default settings, repeat the programming procedure starting with the upper limit switch.

---

6 Specifications

	YYGL35RE-10/17	YYGL45RE-20/15
Power supply	230 V 50Hz	230 V 50Hz
Torque	10 Nm	20 Nm
Power	131 W	161 W
Speed	17 rpm	15 rpm
Protection rating	IP 44	IP 44
Continuous operation time	4 min.	4 min.
Motor length	555 mm	530 mm
Weight	1.8 kg	2.5 kg

7 Motor selection table

		Roller blind height			
		1.5 m	2.0 m	2.5 m	3 m
Torque	**Roller tube diameter**	Permissible roller blind weight by height			
N-10 Nm	Φ = 40 mm	20 kg	19 kg	18 kg	17 kg
N-20 Nm	Φ = 60 mm	42 kg	40 kg	38 kg	36 kg

8 Waste disposal

Do not dispose of with household waste. Dispose of waste in accordance with the relevant legislation. Households play a key role in the recycling of waste electrical and electronic equipment. Waste sorting, including waste equipment and batteries, guarantees that the equipment is not disposed of with domestic household waste but is handed to a designated collection point for the recycling of electrical and electronic waste.